# SAGINAW CONTROL & ENGINEERING
# SCE-S180606LG

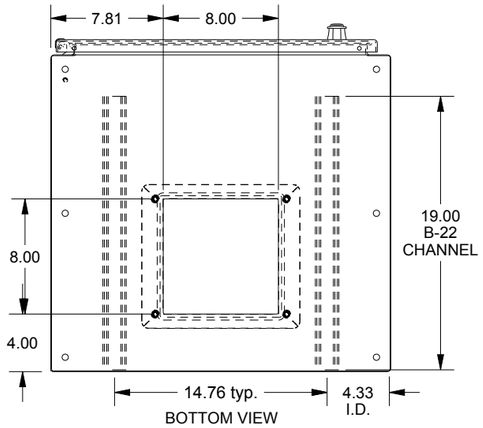


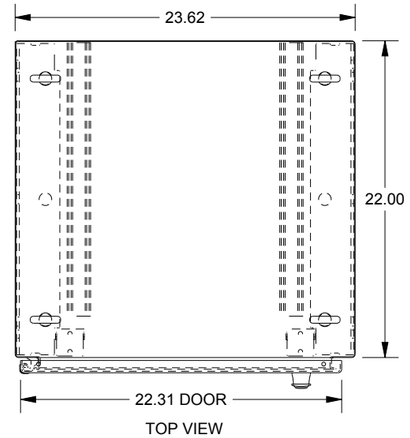


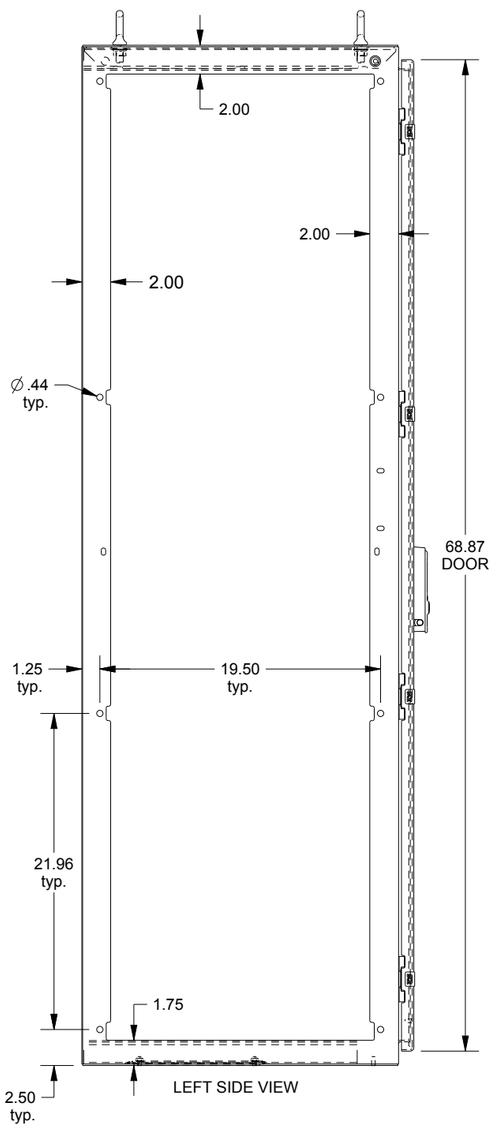


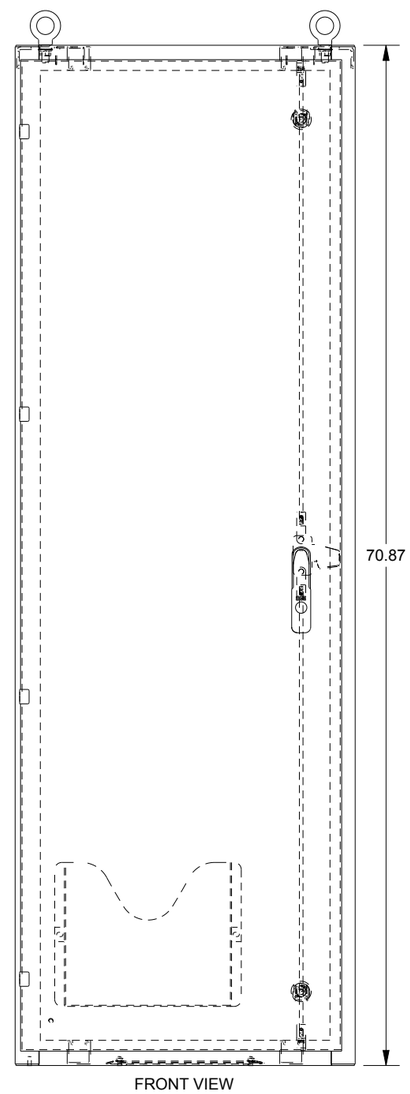


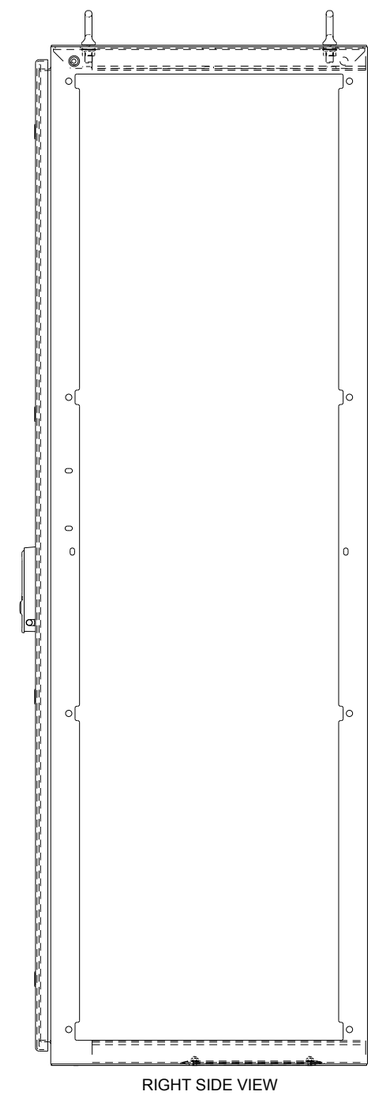


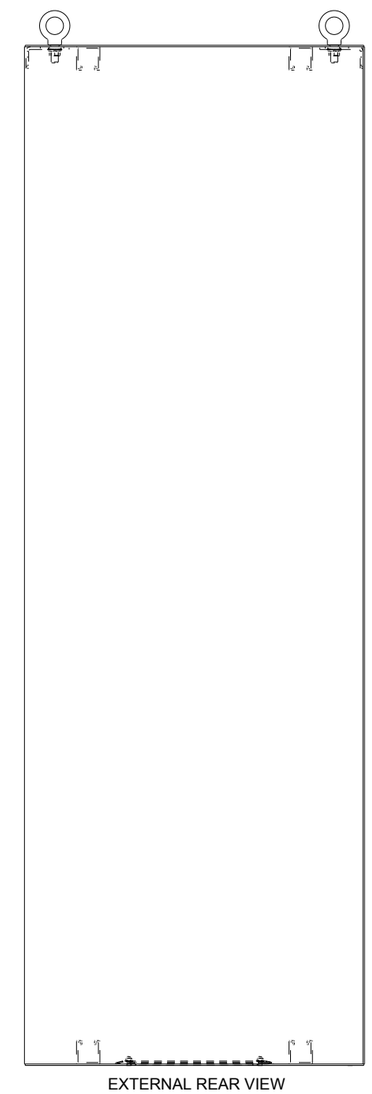


DATA SUBJECT TO CHANGE WITHOUT NOTICE