SAGINAW CONTROL & ENGINEERING
SCE-10P10

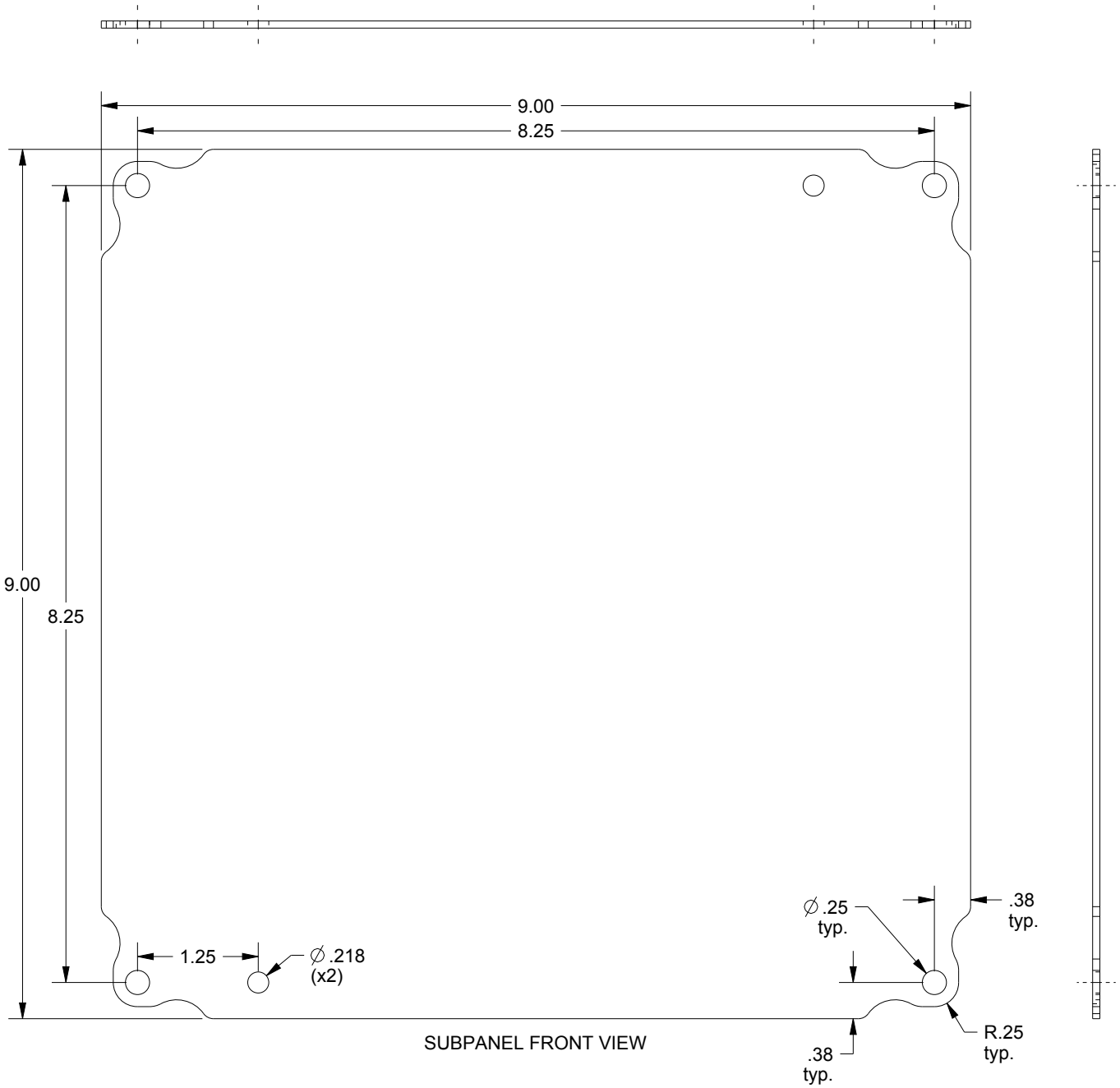

DATA SUBJECT TO CHANGE WITHOUT NOTICE