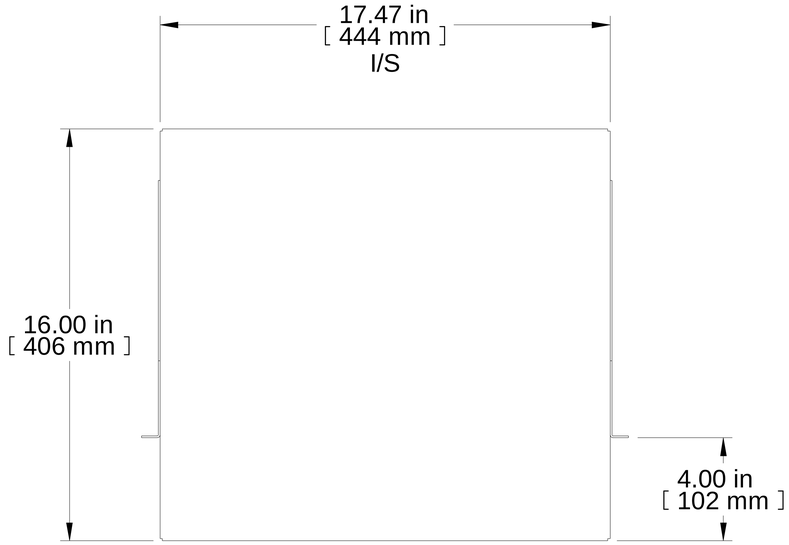

TOP VIEW

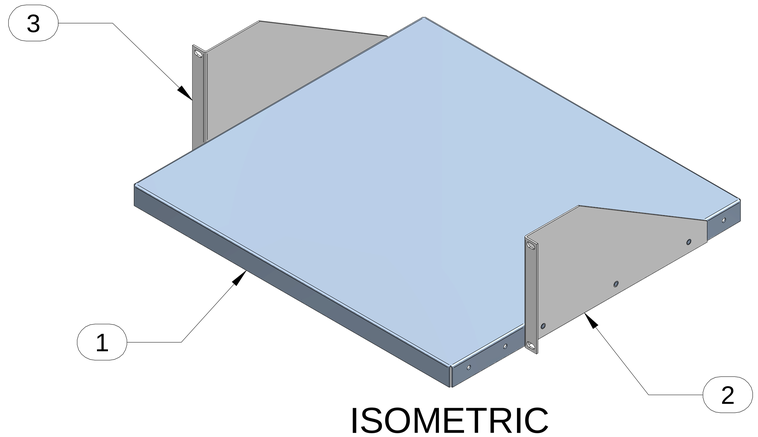

ISOMETRIC

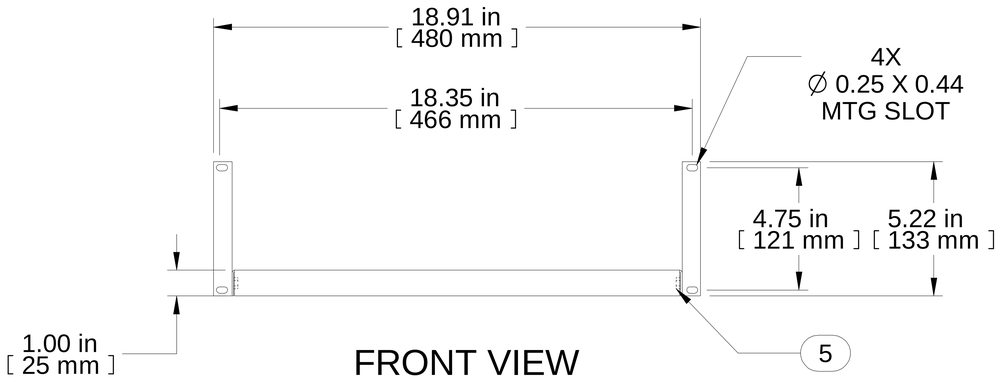

FRONT VIEW

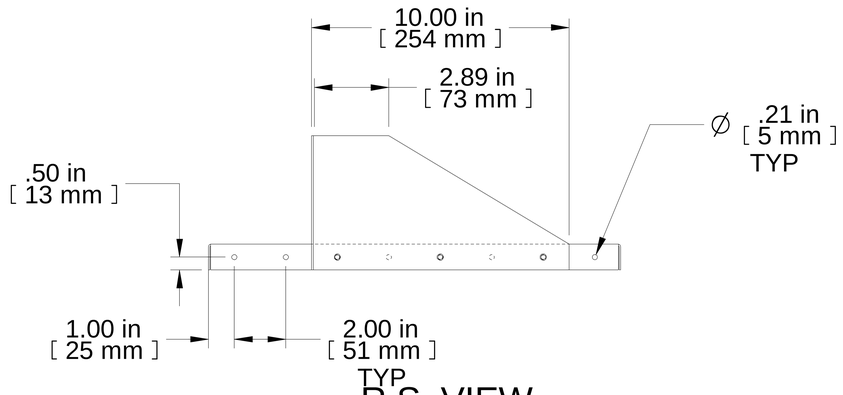

R.S. VIEW

Item Number	Title	Quantity
1	DNRMA - SHELF (1916)	1
2	DNRMA - RIGHT SIDE BRACKET	1
3	DNRMA - LEFT SIDE BRACKET	1
4	10-32 KEP NUT	6

PART NUMBERS

DNRMA1916BK1	PAINTED BLACK TEXTURED

NOTES

Maximum Weight 275 lb
Mounting Hardware Included for 10-32 & 12-24 Rails
See Hammond Website for More Information

Français

Pour tous les détails sur nos produits,
svp veuillez consulter notre site www.hammondmfg.com

Data subject to change without notice. Isometric drawing not to scale.
Les données sont sujettes à changement sans préavis.

RoHS

HAMMOND MANUFACTURING®

www.hammondmfg.com

PART NO. **DNRMA1916BK1**