TOP VIEW

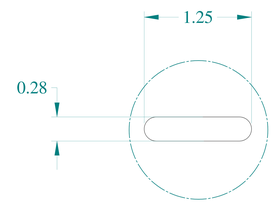

DETAIL Y
TYP

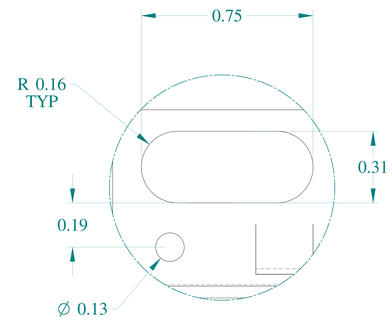

DETAIL Z
TYP

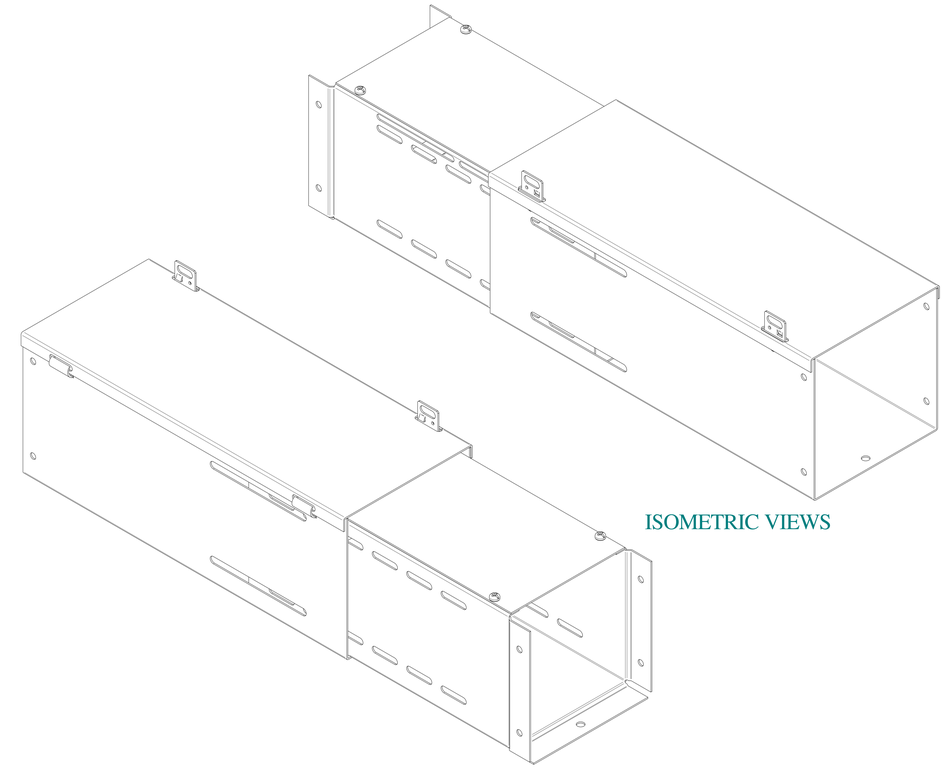

ISOMETRIC VIEWS

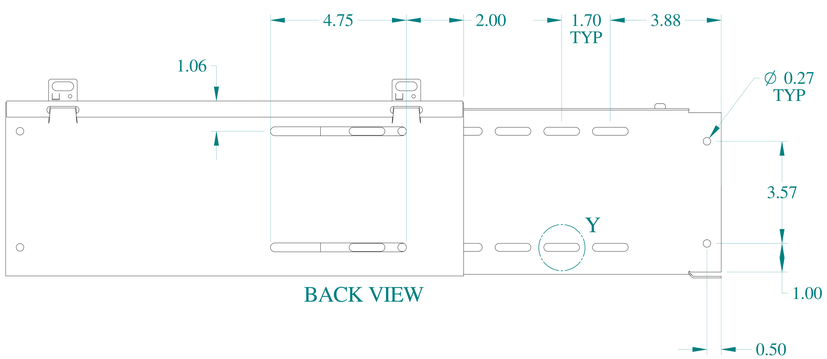

BACK VIEW

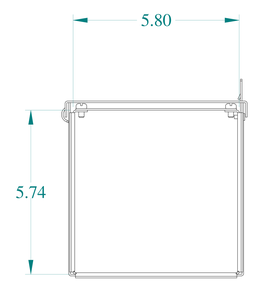

SIDE VIEW

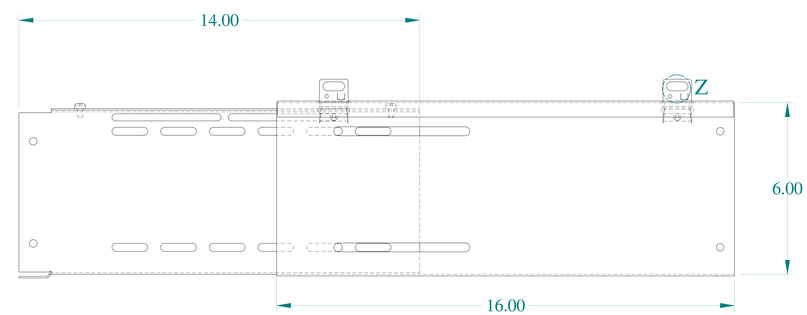

FRONT VIEW

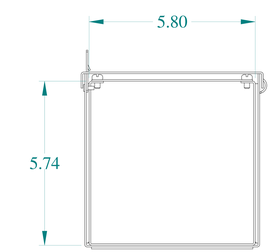

SIDE VIEW

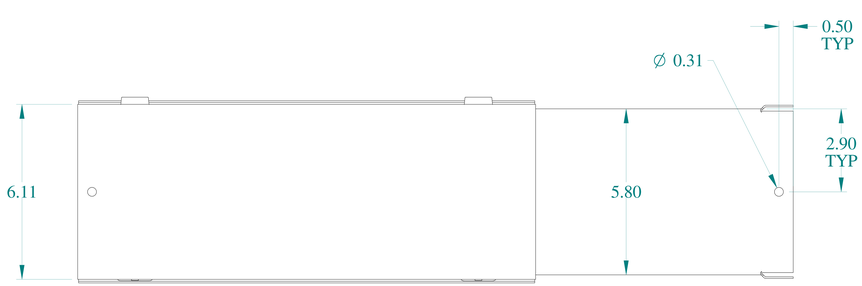

BOTTOM VIEW

HAMMOND MANUFACTURING®

www.hammondmfg.com

Data subject to change without notice.

Part # : CWTL6G	Date : Jan. 30, 2020

Link:www.hammfg.com/CWTL6G