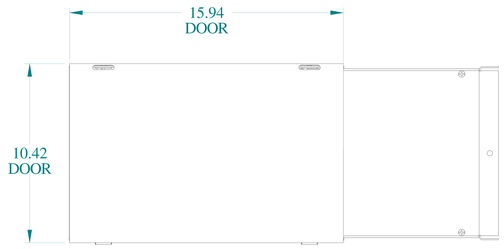

TOP VIEW

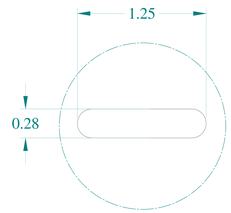

DETAIL Y
TYP

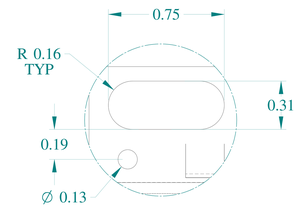

DETAIL Z
TYP

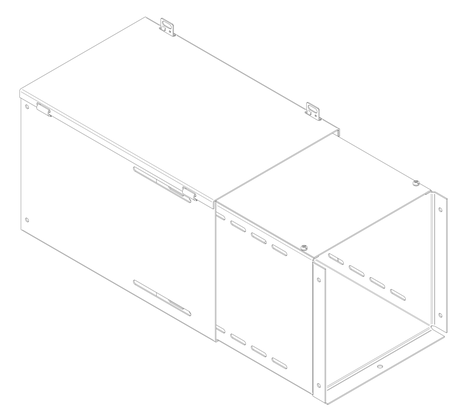

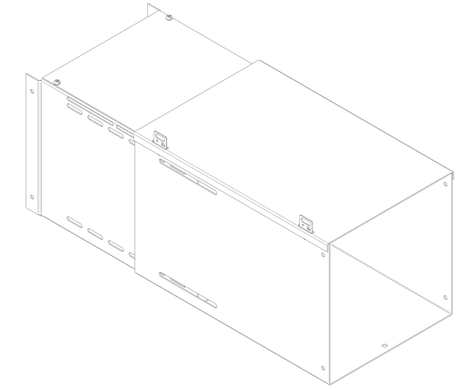

ISOMETRIC VIEWS

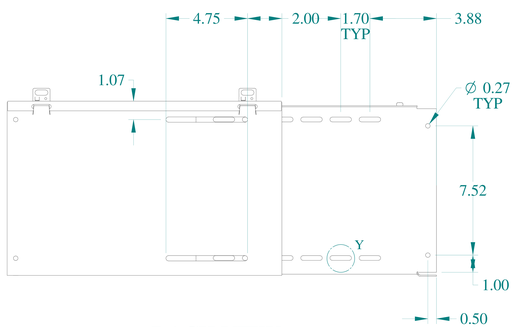

BACK VIEW

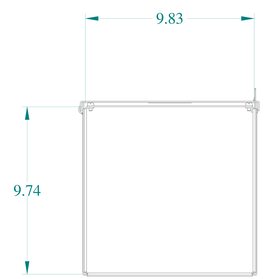

SIDE VIEW

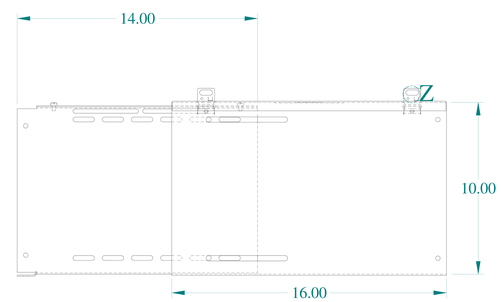

FRONT VIEW

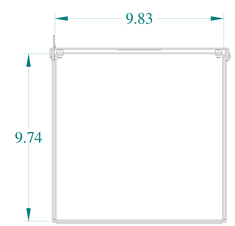

SIDE VIEW

BOTTOM VIEW

HAMMOND MANUFACTURING®

www.hammondmfg.com

Data subject to change without notice.

Part # : CWTL10	Date : Mar. 24, 2019

Link:www.hammfg.com/CWTL10