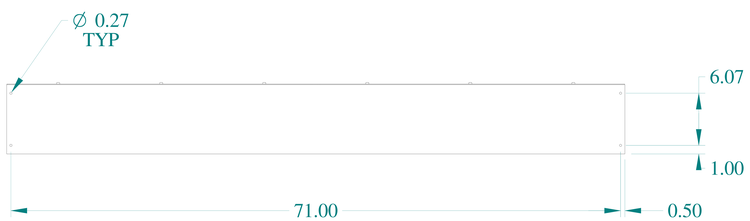

SIDE VIEW

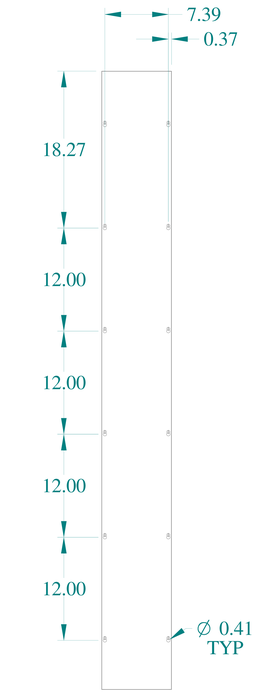

TOP VIEW

FRONT VIEW

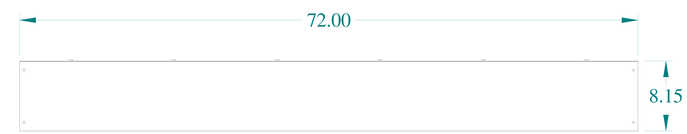

SIDE VIEW

BACK VIEW

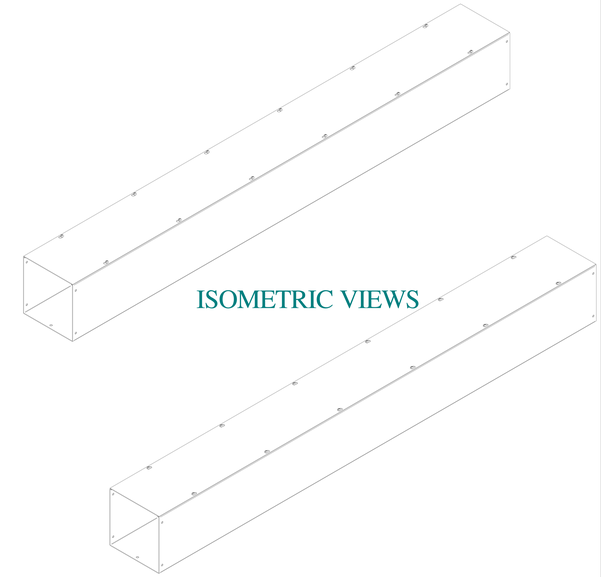

ISOMETRIC VIEWS

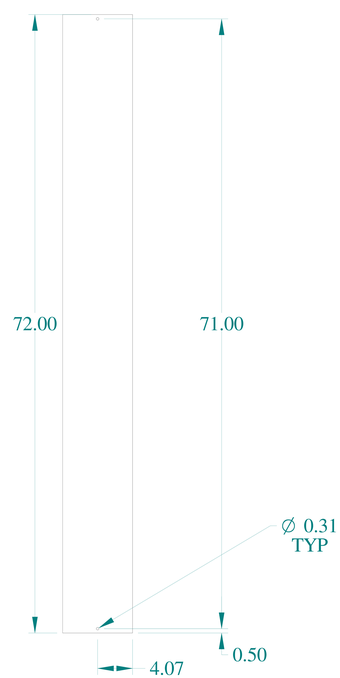

BOTTOM VIEW

HAMMOND MANUFACTURING®

www.hammondmfg.com

Data subject to change without notice.

Part # : CWSC872GNK	Date : Jan. 15, 2020

Link:www.hammfg.com/CWSC872GNK