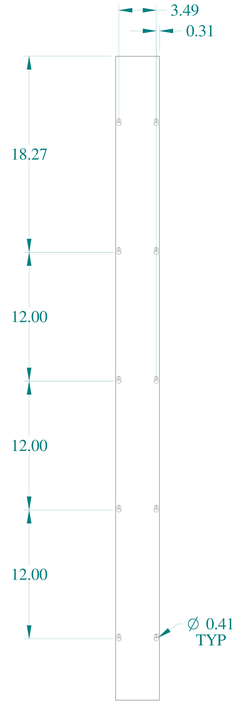

TOP VIEW

SIDE VIEW

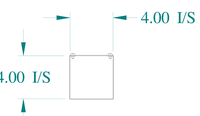

FRONT VIEW

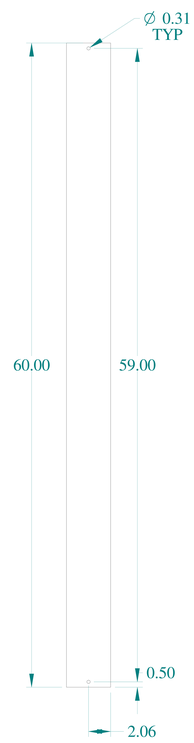

BOTTOM VIEW

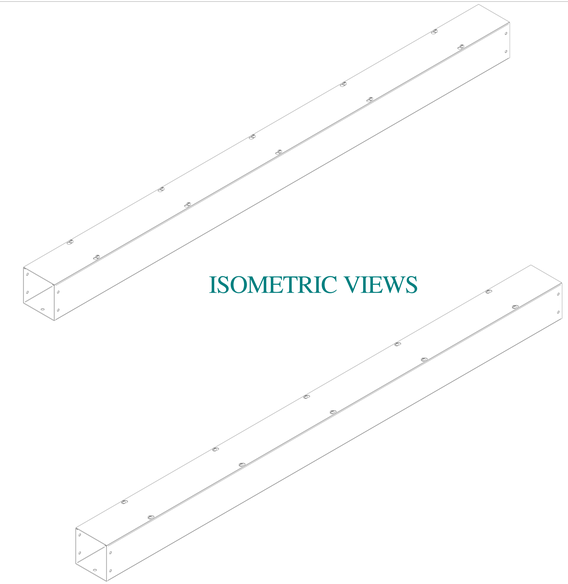

ISOMETRIC VIEWS

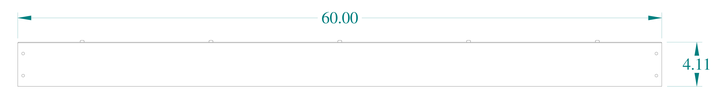

SIDE VIEW

BACK VIEW

HAMMOND MANUFACTURING®

www.hammondmfg.com

Data subject to change without notice.

Part # : CWSC460GNK	Date : Jan. 15, 2020

Link:www.hammfg.com/CWSC460GNK