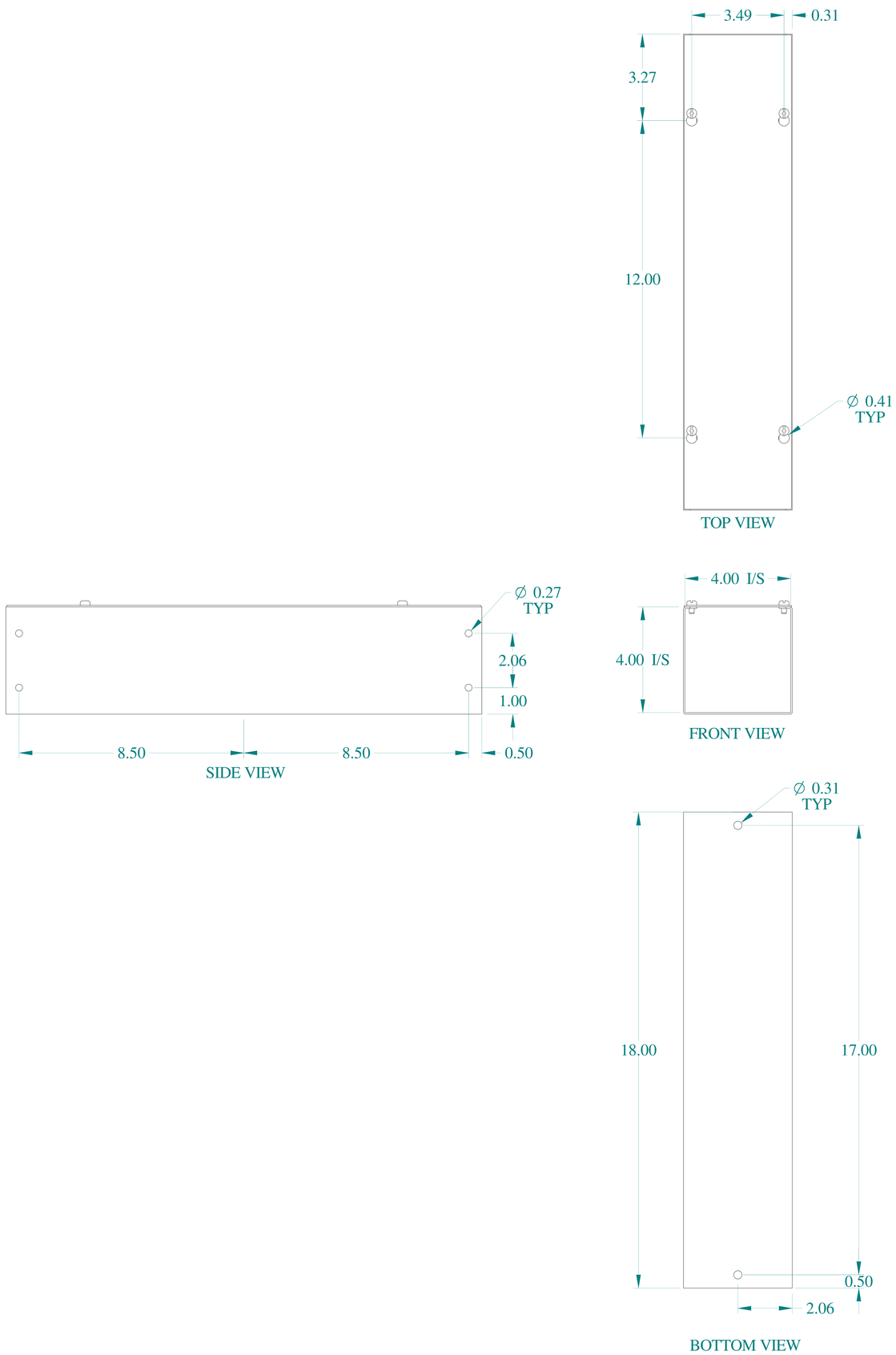

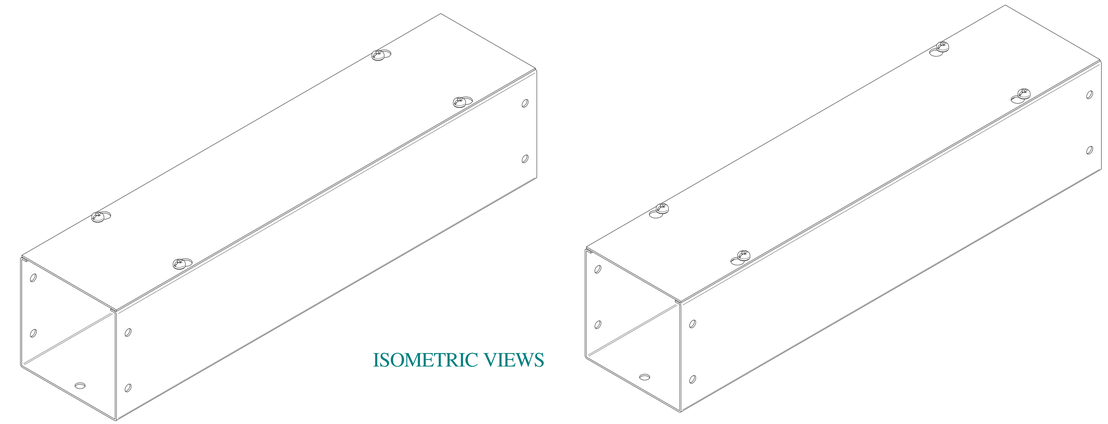

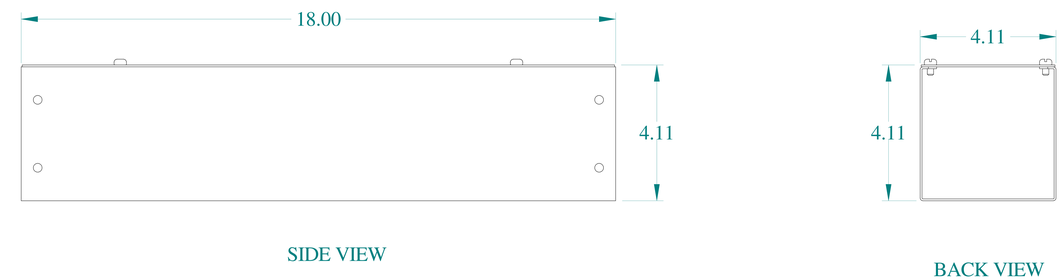

HAMMOND MANUFACTURING®

www.hammondmfg.com

Data subject to change without notice.

Part # : CWSC418GNK	Date : Jan. 15, 2020

Link:www.hammfg.com/CWSC418GNK