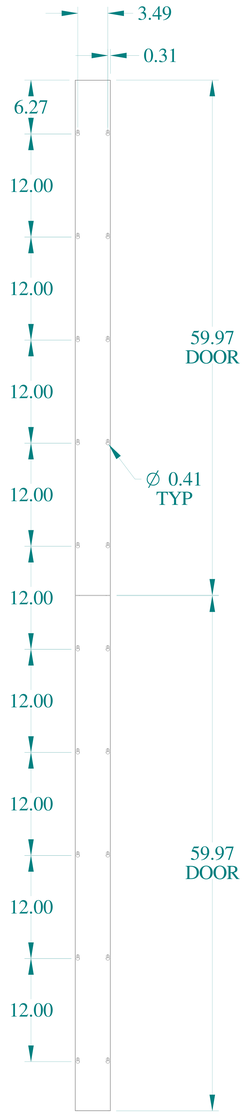


TOP VIEW

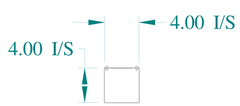


FRONT VIEW

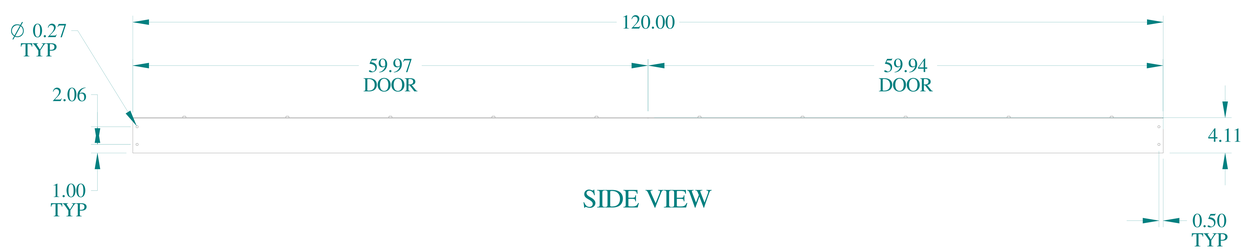


SIDE VIEW

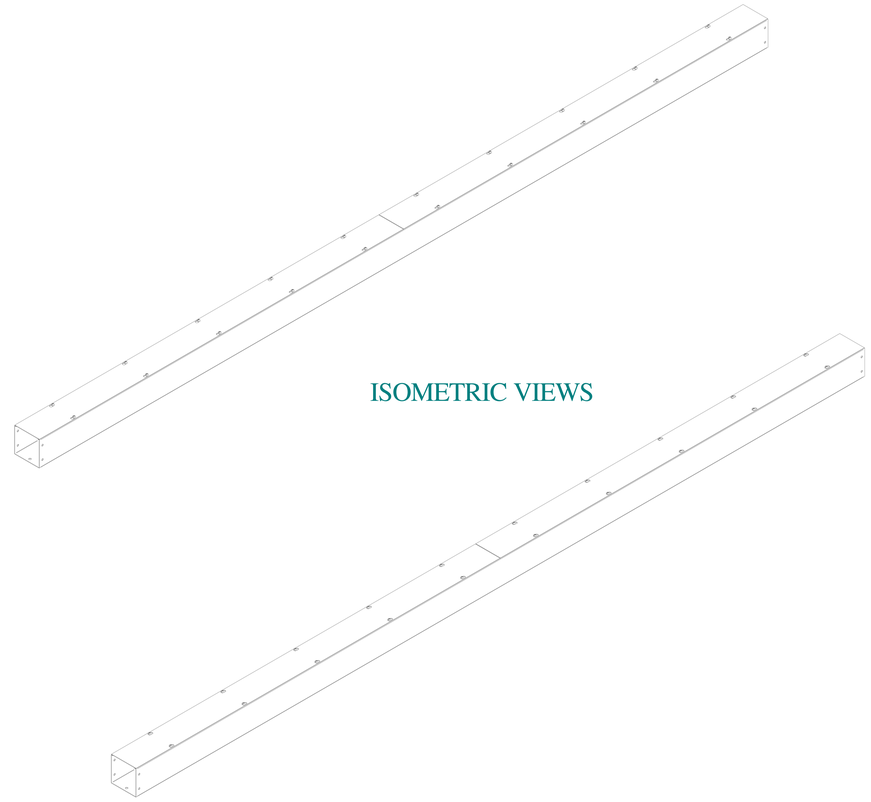

ISOMETRIC VIEWS

HAMMOND MANUFACTURING®

www.hammondmfg.com

Data subject to change without notice.

| | |
|---|---|
| Part # : CWSC4120GNK | Date : Jan. 15, 2020 |

Link:www.hammfg.com/CWSC4120GNK