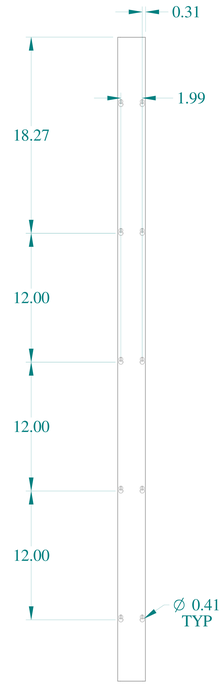

TOP VIEW

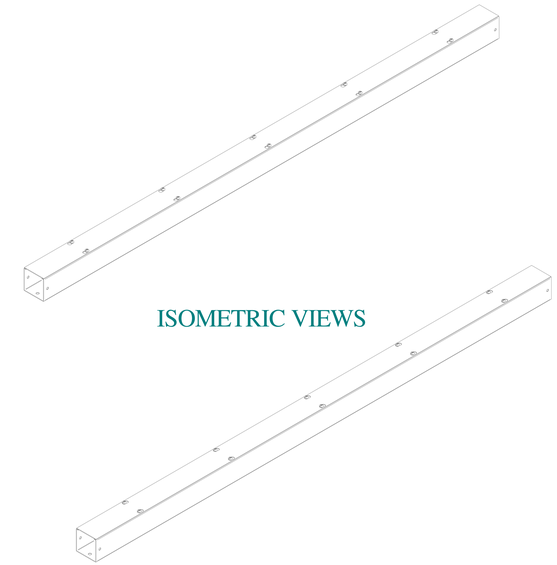

ISOMETRIC VIEWS

SIDE VIEW

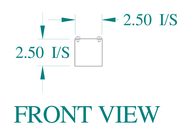

FRONT VIEW

SIDE VIEW

BACK VIEW

BOTTOM VIEW

HAMMOND MANUFACTURING®

www.hammondmfg.com

Data subject to change without notice.

Part # : CWSC260GNK	Date : Jan. 15, 2020

Link:www.hammfg.com/CWSC260GNK