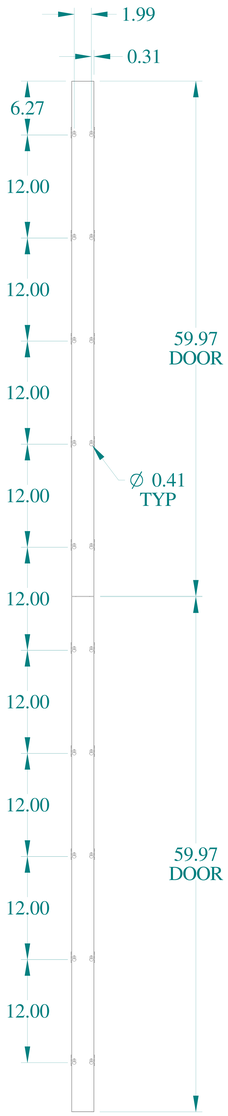

TOP VIEW

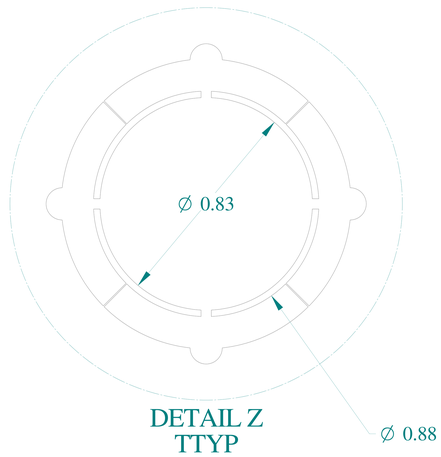

DETAIL Z
TTYP

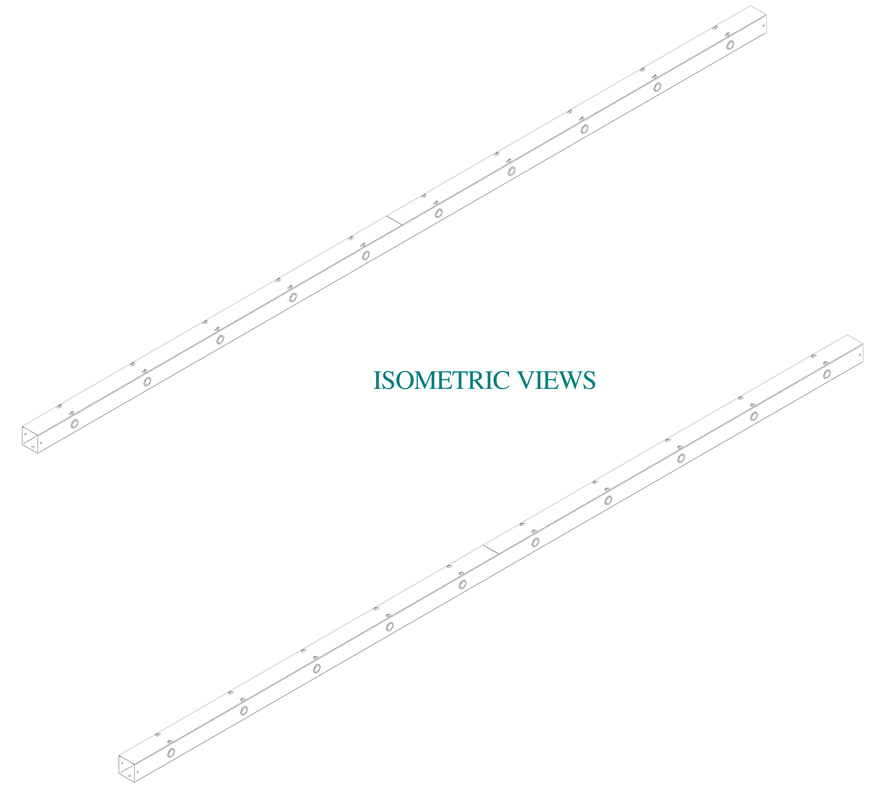

ISOMETRIC VIEWS

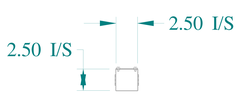

FRONT VIEW

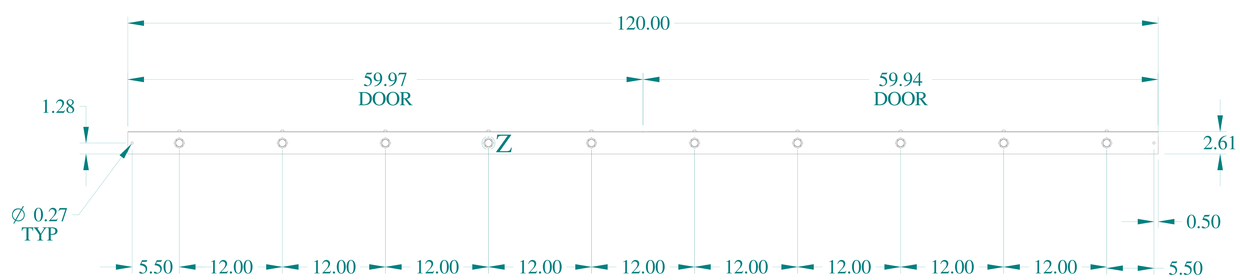

SIDE VIEW

HAMMOND MANUFACTURING®

www.hammondmfg.com

Data subject to change without notice.

Part # : CWSC2120G	Date : Jan. 31, 2020

Link:www.hammfg.com/CWSC2120G