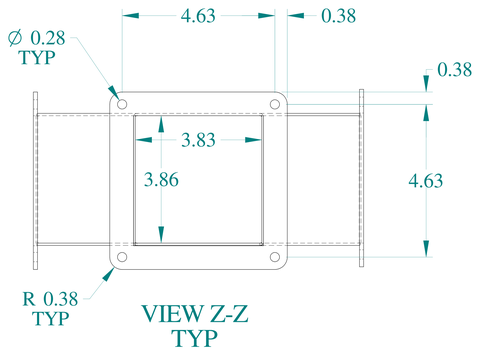

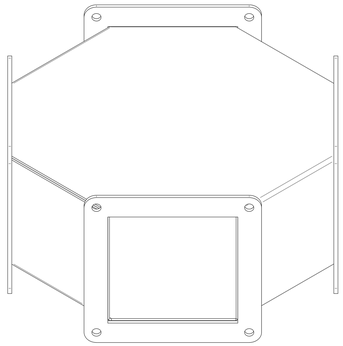

ISOMETRIC VIEWS

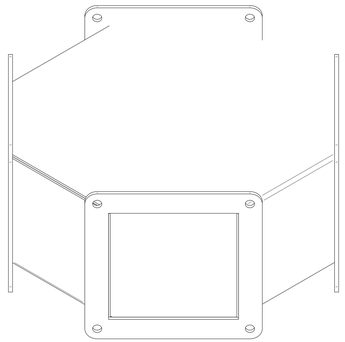

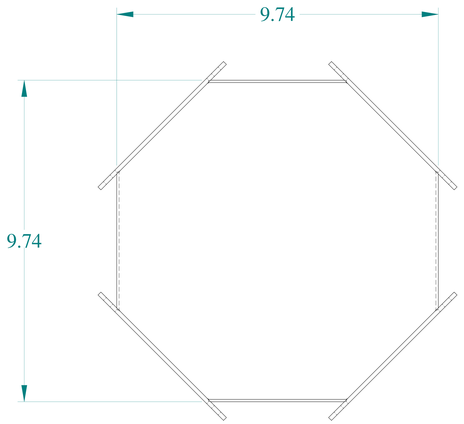

FRONT VIEW

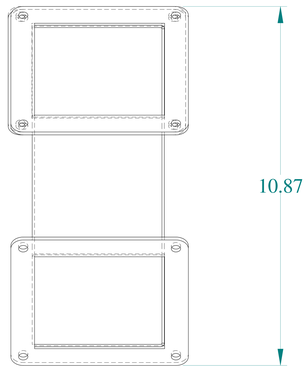

SIDE VIEW

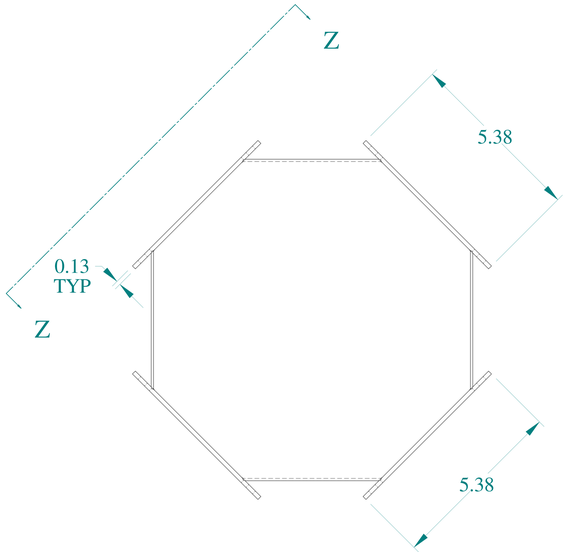

BACK VIEW

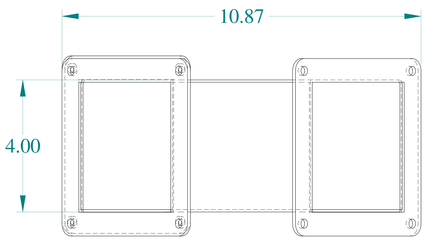

BOTTOM VIEW

HAMMOND MANUFACTURING®

www.hammondmfg.com

Data subject to change without notice.

Part # : 1487CY	Date : Mar. 22, 2019

Link:www.hammfg.com/1487CY