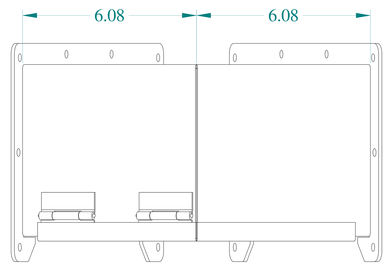

TOP VIEW

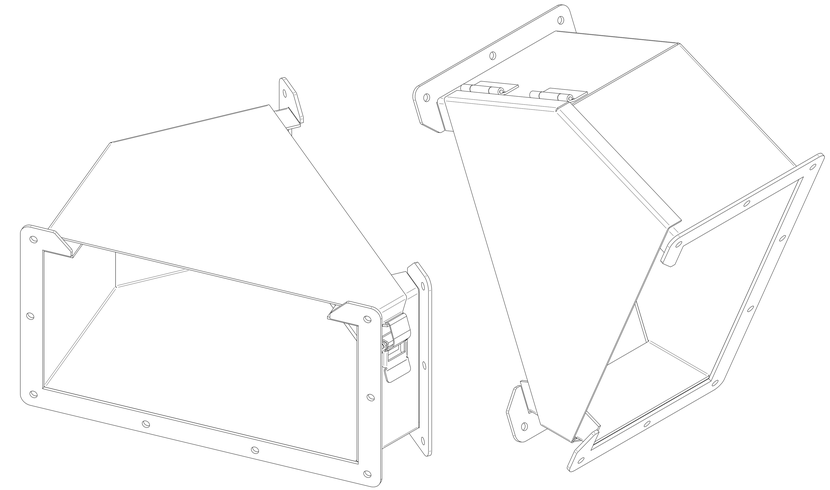

ISOMETRIC VIEWS

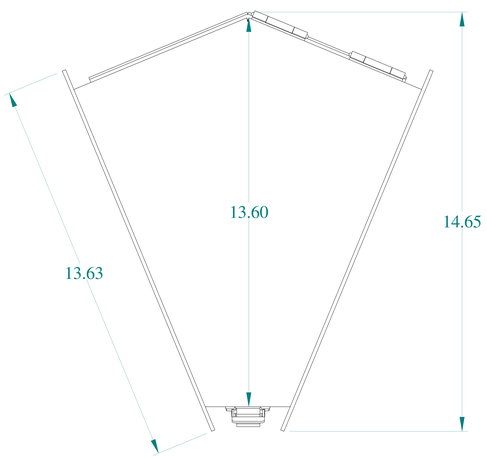

BACK VIEW

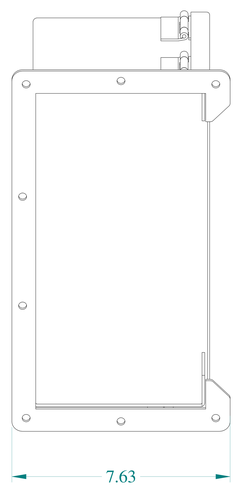

SIDE VIEW

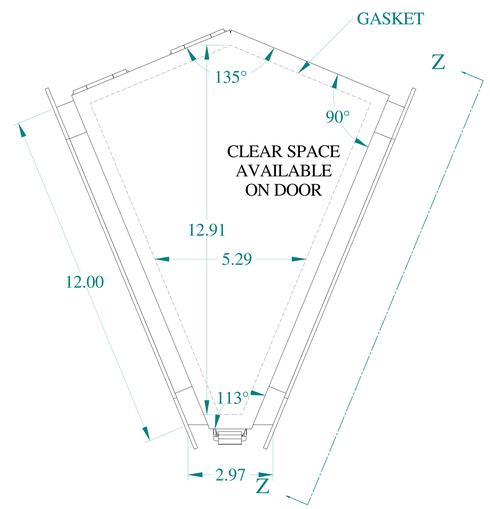

FRONT VIEW

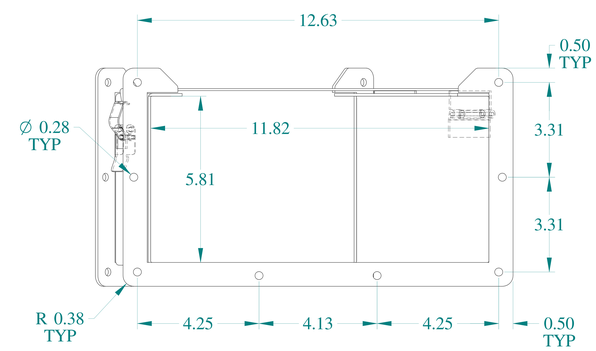

VIEW Z-Z

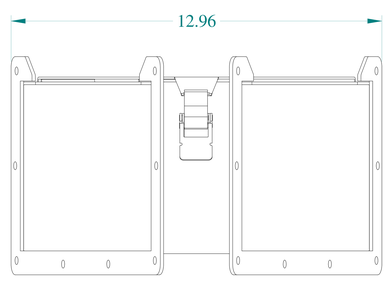

BOTTOM VIEW

HAMMOND MANUFACTURING®

www.hammondmfg.com

Data subject to change without notice.

Part # : 1485F4N	Date : Mar. 24, 2019

Link:www.hammfg.com/1485F4N