ISSUE DATE: 02/05/2014

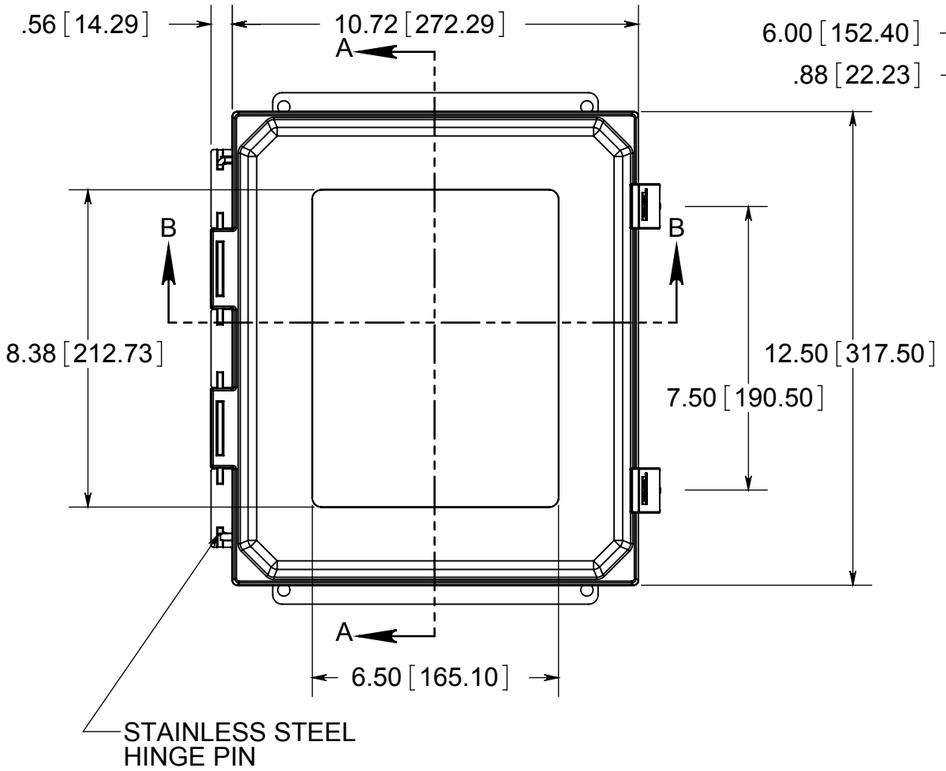

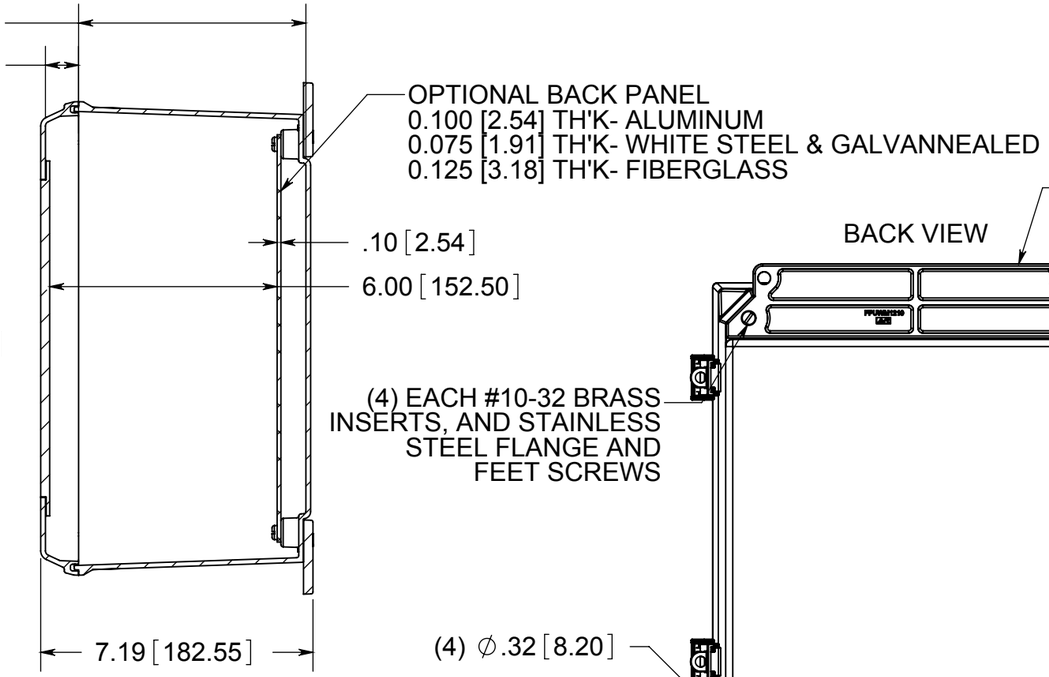

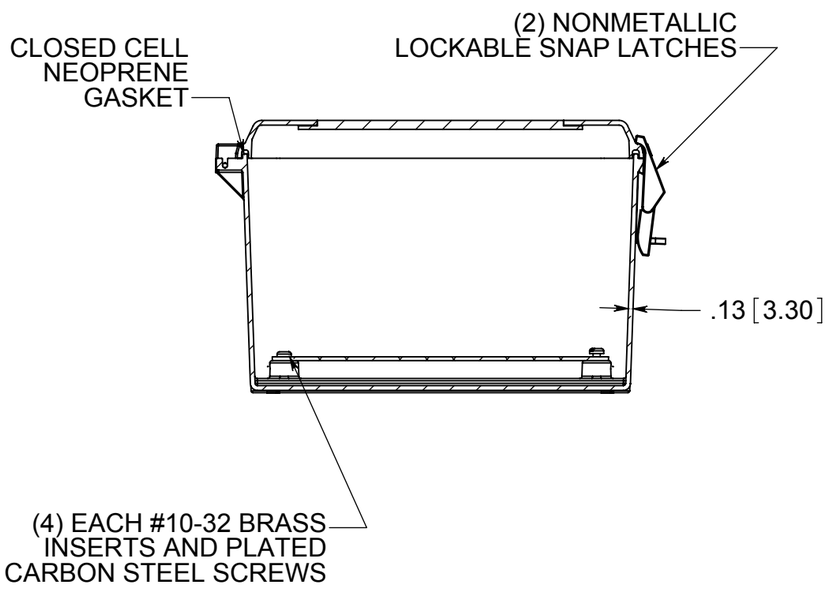

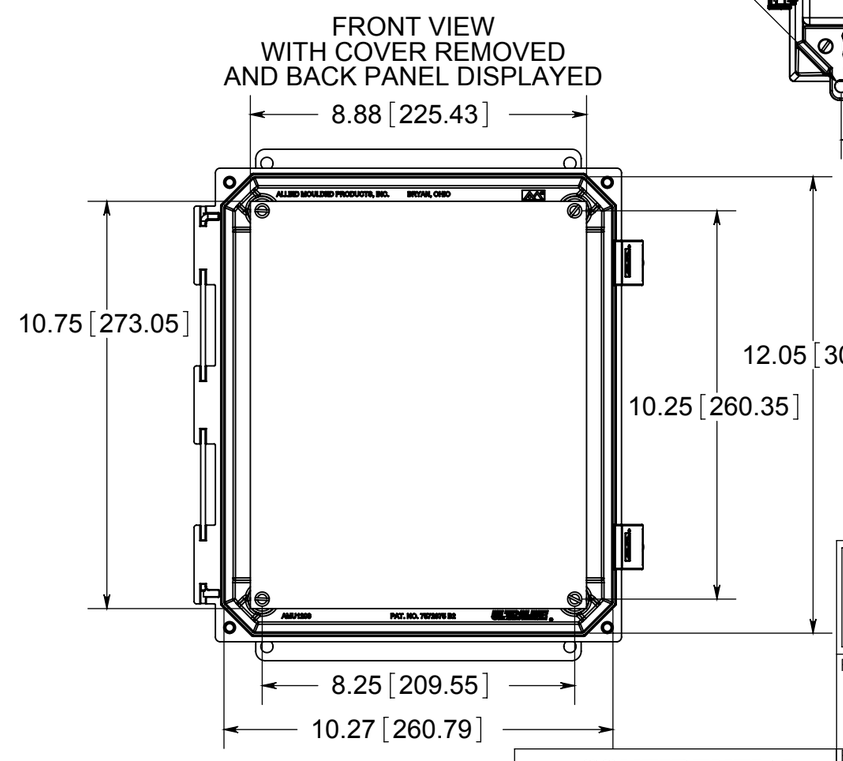

MATERIAL:
BOX-COMPRESSION MOLDED FIBERGLASS REINFORCED POLYESTER
COVER- COMPRESSION MOLDED FIBERGLASS REINGORCED POLYESTER
CLEAR COVER AND WINDOWS- POLYCARBONATE

CONFIDENTIAL

THIS MATERIAL IS OWNED BY THE ALLIED MOULDED PRODUCTS COMPANY, IS DISCLOSED IN CONFIDENCE, AND IS NOT TO BE REPRODUCED OR DISTRIBUTED WITHOUT PRIOR WRITTEN PERMISSION FROM ALLIED MOULDED PRODUCTS.

® **ALLIED MOULDED PRODUCTS**
BRYAN, OHIO
The Original Fiber Glass Outlet Box

PRODUCT SERIES

AMU Ultraline

Part No.

AMU1206NLWF