AMU Series

JIC SIZE JUNCTION BOXES

Cover Type

Solid/Opaque

Closure Type

Hinged Screw Cover

Application

Designed to insulate and protect controls and components in both indoor and outdoor applications often found in oil refineries, waste water treatment equipment, chemical plants, and many other applications

- Especially well suited for high temperature or corrosive environments
- Protects from dirt, dust, oil and water
- For use with industrial control equipment

Standards

- UL 50 and UL 50E Types 1, 2, 3, 3R, 4, 4X, 12 and 13
- CSA C22.2 No. 94 Types 1, 2, 3, 3R, 4, 4X, 12 and 13
- Complies with:
  - NEMA Types 1, 2, 3, 3R, 4, 4X, 12 and 13
  - IEC 60529 Type IP66
  - RoHS directive

Construction

- Compression molded fiberglass reinforced polyester construction with flush, solid/opaque cover
- Allied Moulded ULTRAGUARD® fiberglass reinforced polyester material formulation - UV stabilized for outdoor use
- Opaque cover, base, feet, flanges — Light gray color (RAL 7035)
  Note: foot models mounting hardware supplied in a bag. Flanged models are pre-assembled
- 316 stainless steel hinge pin and captive cover screws
- Formed-In-Place (FIP) polyurethane gasket system encased in continuous channel
- Polycarbonate foot/flange mounting brackets with 316 stainless steel fasteners
- #10-32 threaded brass inserts are installed for back panel mounting

Accessories & Modifications

- Optional back panels and hinged front panels
- Custom holes and cutouts
- Custom size polycarbonate viewing windows
- Molded-in color matching
- EMI/RFI shielding
- Factory-supplied silk screening

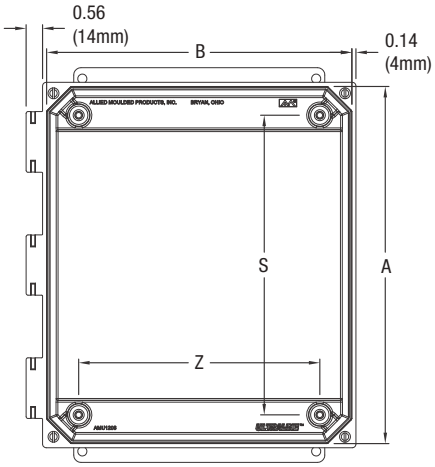

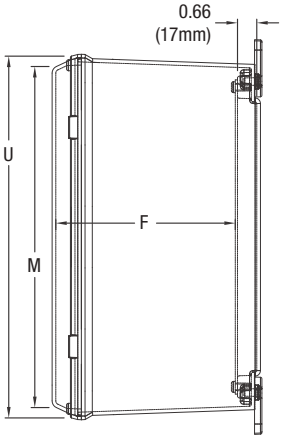

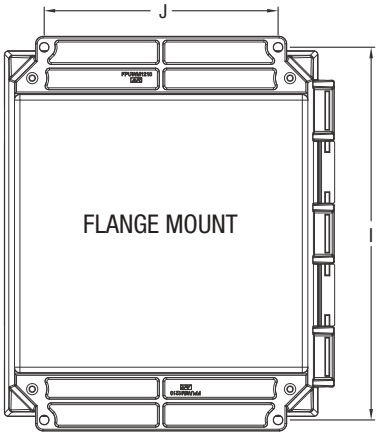

Note: Cover Removed for Clarity

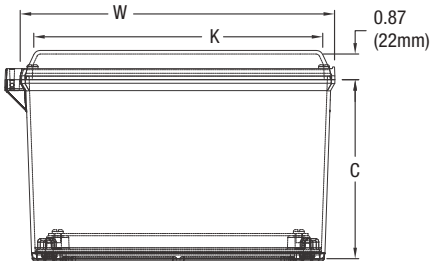

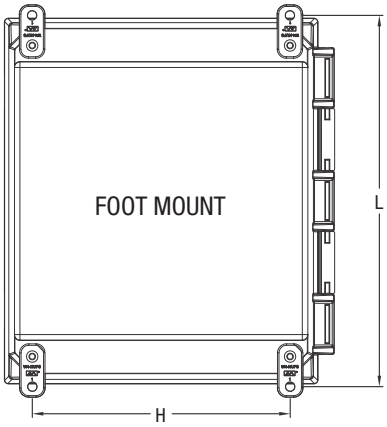

*Nom. Wall Thickness: .13 (3mm)
16" size: .16 (4mm)
18" & 20" sizes: .19 (5mm)

Part No.	Box Size			Usable Depth	Panel Boss Centers		Back Panel Size			Flange Mount Centers		Foot Mount Centers		Cover Size			
	A	B	C	F	S	Z	Ht.	Wid.	P/N	J	I	H	L	K	M	W	U
AMU664H	6.04	6.26	4.12	4.09	4.25	4.25	4.81	4.81	PL66	4.00	6.88, 6.75	4.91	6.75	5.70	5.53	6.72	6.50
AMU664HF	153mm	159mm	105mm	103mm	108mm	108mm	122mm	122mm	PLA66	102mm	175, 171mm	125mm	171mm	145mm	140mm	171mm	165mm
AMU864H	8.06	6.28	4.13	4.11	6.25	4.25	6.75	4.88	PL86	4.00	8.88, 8.75	4.91	8.75	5.75	7.53	6.72	8.50
AMU864HF	205mm	160mm	105mm	104mm	159mm	108mm	171mm	124mm	PLA86	102mm	222, 226mm	125mm	222mm	146mm	191mm	171mm	216mm
AMU1084H	10.05	8.27	4.13	4.12	8.25	6.25	8.75	6.88	PL108	6.00	10.75	6.91	10.75	7.75	9.53	8.72	10.50
AMU1084HF	255mm	210mm	105mm	105mm	210mm	159mm	222mm	175mm	PLA108	152mm	273mm	176mm	273mm	197mm	242mm	221mm	267mm
★ AMU1086H	10.04	8.26	6.13	6.10	8.25	6.25	8.75	6.88	PL108	6.00	10.75	6.91	10.75	7.75	9.53	8.72	10.50
AMU1086HF	255mm	210mm	156mm	155mm	210mm	159mm	222mm	175mm	PLA108	152mm	273mm	175mm	273mm	197mm	242mm	221mm	267mm
AMU1206H	12.05	10.27	6.13	6.12	10.25	8.25	10.75	8.88	PL120	8.00	12.75	8.82	12.70	9.75	11.53	10.72	12.50
AMU1206HF	306mm	261mm	156mm	155mm	260mm	210mm	273mm	226mm	PLA120	203mm	324mm	224mm	323mm	248mm	293mm	272mm	318mm
AMU1426H	14.05	12.27	6.13	6.11	12.25	10.25	12.75	10.88	PL142	10.01	14.75, 14.62	10.82	14.70	11.75	13.53	12.72	14.50
AMU1426HF	357mm	312mm	156mm	155mm	311mm	260mm	324mm	276mm	PLA142	254mm	375, 371mm	275mm	373mm	298mm	344mm	323mm	368mm
AMU1648H	16.05	14.27	8.14	8.09	14.25	12.25	14.75	12.88	P164	12.00	16.75	11.47	16.91	13.75	15.53	14.72	16.50
AMU1648HF	408mm	362mm	207mm	205mm	362mm	311mm	375mm	327mm	PA164	305mm	425mm	291mm	430mm	349mm	394mm	374mm	419mm
AMU1860H	18.12	16.34	10.13	10.10	16.26	14.25	16.88	14.88	P186	12.00	18.88, 18.76	13.72	19.16	15.75	17.78	16.97	18.75
AMU1860HF	460mm	415mm	257mm	257mm	413mm	362mm	429mm	378mm	PA186	305mm	480, 477mm	348mm	487mm	400mm	452mm	431mm	476mm
AMU2060H	19.87	16.09	10.14	10.09	17.81	13.81	18.44	14.44	P206	10.00	21.28	13.16	20.53	15.75	19.53	16.72	20.50
AMU2060HF	505mm	409mm	257mm	256mm	452mm	351mm	468mm	367mm	PA206	254mm	541mm	334mm	521mm	400mm	496mm	425mm	521mm

All dimensions are in inches unless otherwise noted
"I" dimensions with multiple numbers indicate slotted holes
Enclosure base part numbers come standard with 4 separately bagged feet (ex. AMU664H)
Part numbers with "F" signify factory installed flanges (ex. AMU664HF)
Additional back panels found on page 128
★Coming soon!

Data subject to change without notice